Simulation, Optimisation and Design a Platform for in-vivo Electrophysiological Signals Processing

F. Babarada[1], C. Ravariu[1], J. Arhip[2]

[1] University Politechnica of Bucharest, Faculty Electronics Telecommunications and Information Technology, DCAE, ERG, Bucharest, Romania
[2] S.C. Seletron Software si Automatizari SRL, Bucharest, Romania

Abstract— The paper presents a hardware solution of the in vivo electrophysiological signals continuous processing and using a data vector acquisition on PC. The originality of the paper comes from some blocks proposal, which selective amplify the biosignals. One of the major problems in the electrophysiological monitoring is the difficulty to record the weak signals from deep organs that are covered by noise and the cardiac or muscular strong signals. An automatic gain control block is used, so that the high power skin signals are less amplified than the low components. The analog processing block is based on a dynamic range compressor, containing the automatic gain control block. The following block is a clipper since to capture all the transitions that escape from the dynamic range compressor. At clipper output a lowpass filter is connected since to abruptly cut the high frequencies. The data vector recording is performing by strong internal resources microcontroller including ten bits A/D conversion port. Design of analogical blocks is assisted by electronics circuit's simulation and optimization.

Keywords— **Simulation, Design, Health care, Compressor technique, Electrophysiological signal.**

I. Introduction

The common techniques from the human electrophysiology are non-invasive, with electrodes placed on the tissue (e.g. metallic electrodes in contact with gastric mucosa in electro-gastro-graphy [1] or at cutaneous level in the classical electro-cardio-graphy ECG [2]).

Therefore, a main problem arises when the electrodes are placed onto skin: the useful weak signals are buried in high level parasitic signals. The non-invasive electrophysiological methods suffer from noise, collected by the surface electrodes. There are many types of noise to be considered:

- *Inherent noise in electronics equipment*: It is generated by all electronics equipment and can't be eliminated. It is only reduced by high quality components using. It has a frequency range: 0 – several thousand Hz, [3].
- *Ambient noise:* The cause is the electromagnetic radiation, with possible sources: radio transmission, electrical wires, fluorescent lights. It has a dominant frequency of 60Hz and amplitude of 1 – 3 x EMG signal, [4].
- *Motion artefact*: It has two main sources: electrode/skin interface and electrode/cable, having a frequency range of 0 – 20Hz. It is reducible by a proper circuitry and set-up.
- *Inherent instability of signal:* All electronics equipments generate noise and the amplitude is somewhat randomized, being in correlation with the discrete nature of the matter. This noise has a frequency range of 0 – 20Hz and cannot be removed.

In this situation, a gastric signal for instance, recorded at skin level, is hundreds times lower than the parasitic signals.

The most accurate solution is the invasive one, straight to the target organ, using microelectrodes, [5]. Unfortunately, the majority of organs are inaccessible without a surgical act which adds two great disadvantages: the health-state in danger and high costs.

This paper presents an analog processing and digital recording system for low power electrophysiological signals, with the possibility to use them in medical applications like ECG, EGG, EMG etc. For low contact electrodes area, the noise introduced by the electrodes begins to be most significant. As the results of modelling of the ensemble source-electrode, it is recommended for the amplifier to be implemented by a low noise and distortions, transimpedance amplifier stage followed by one low passing filter. For very low electrophysiological signals it is necessary a differential amplifier because it has a high common mode rejection of parasitic signals characteristic [6].

II. The electrophysiological signals processing

As in the case of many concepts from engineering, automatic gain control was also discovered by natural selection.

A. The automatic gain control

Automatic gain control (AGC) is an adaptive system found in many electronic devices. The average output signal level is feedback to adjust the gain to an appropriate level for a range of input signal levels. AGC algorithms often use a proportional-integral-differential controller.

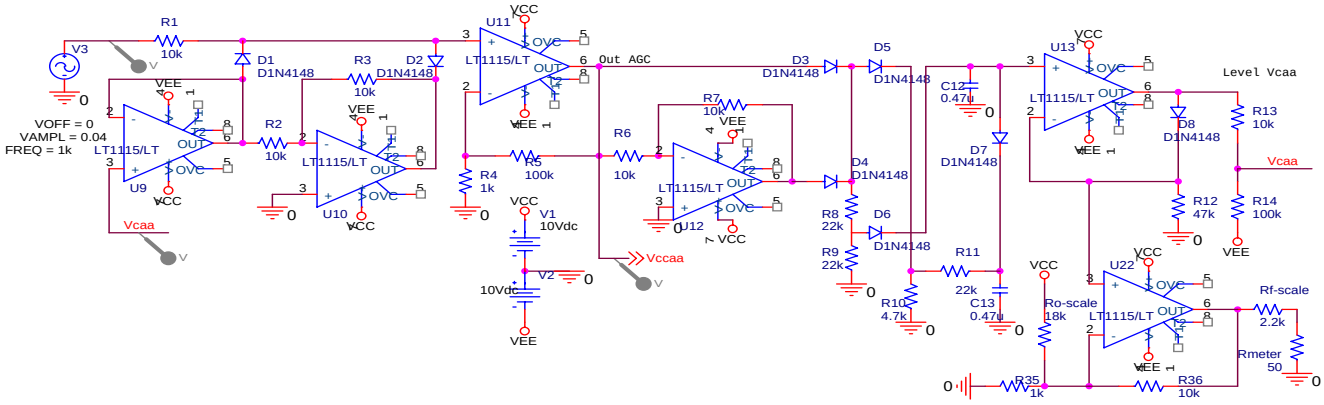

Fig. 1 The automatic gain control

The basic components of compressor are the U9, U10 integrated circuits, which biases the D1, D2 diodes, fig. 1, at their I-V curve knee. The input voltage is in the range of 10 to 300mVp and the output voltage is in the range of 5 to 10mVp. The voltage command of AGC is in the range of 300 to 600mVdc. The resistor R3 allows the circuit to be balanced and adjust the output voltage so it does not produce distortion in the output when gain reduction is active. In order to provide the voltage command of AGC (Vcaa) we choose a feedback configuration design. This design contain the amplifier, composed by U11, R4, R5 with the amplification around 101, the full wave rectifier, composed by D3, D4, R6, R7, U12 which bring the signal to the absolute value and the positive voltage detection realized with D6, C12 connected trough half voltage divider R8, R9.

The voltage over the condenser C12 is exactly the voltage command of the automatic control amplifier Vcaa. Discharging of the condenser C12 is made through the diode D7. This diode is opposite polarized by a voltage greater than Vcaa, respectively the voltage produced by diode D5, which is not reduced by half and loaded at the absolute value the condenser C13 through resistances R10 and R11. At reduction of the input signal amplitude the voltage Vcaa remains constant until C13 is discharged by R11 and R10. Thus at transient simulation at 1kHz, the amplification remains constant 5ms and then increase in time of 15ms. To reduce the temperature dependence of the automatic gain control we used the IC stage realized with U13, the diode D8 and the resistance R12, achieving the circuit from fig. 1. The voltage command Vcaa can be adjusted from resistive divider composed with resistances R13 and R14.

In order to display the output level of the dynamic range compressor signal we added the stage composed with operational amplifier U22 that adapt the connection and the adjusting of zero and end of scale for a linear display with LEDs bargraph.

The fig. 2 presents the beginning action of the automatic gain control for the imput amplitude signal 20mV.

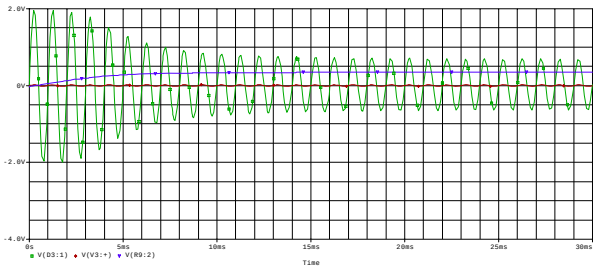

Fig. 2 Simulation of output voltage CCAA and the detected voltage VCAA for the input signal amplitude of 20mV.

B. The clipper

A clipper circuit was added to catch all the transitions that escape out of the dynamic range compressor. This is done with two diodes D10 and D11, connected in parallel, fig. 3. Each diode is reverse biased so that they do not drive until they reach a certain amount of tension. This voltage is set using a resistive divisor consisting of R20 and R21 to a value of approximately 1V and may be adjusted to set the threshold for clipper. It is applied to the uninverted input of the operational amplifier U18 and from the output of U18 to the inverted input of the second operational amplifier U19.

Between the AGC system and the clipper, an adapting gain block is installed. If this block is operating at unity

gain, it is practically transparent and the clipper is operating at threshold.

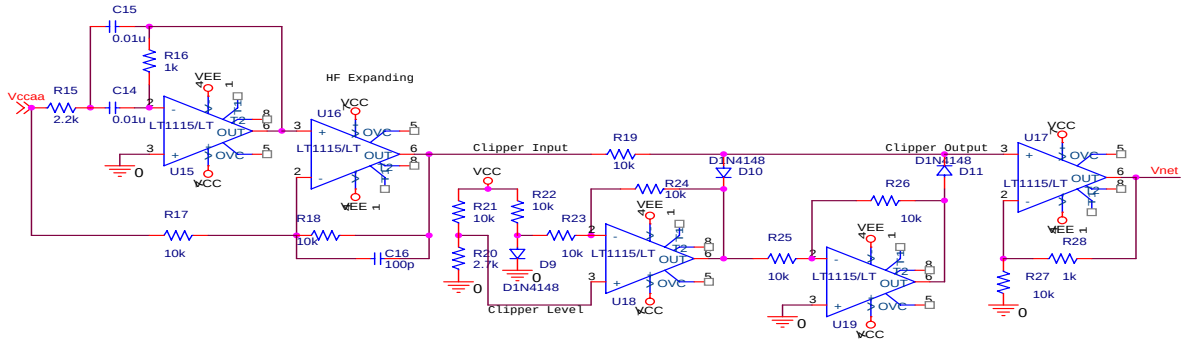

Fig. 3 The clipper

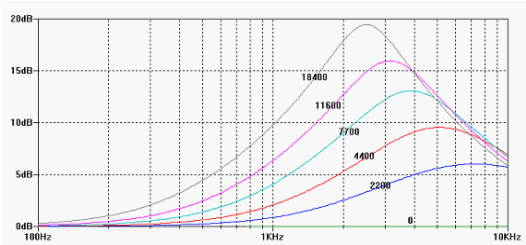

Fig. 4 The clipper driver frequency response

When the resistor R16 in the schematic fig. 3, is set to zero ohms, this circuit is simply a unity gain block. As R16 is

Adjusted, the upper audio frequencies are increased and resulting the family of curves from fig. 4. The reason for introducing the resistance R22 and diode D9 is for the clipper output signal temperature compensation.

C. The lowpass filter

Since the clipper circuit can create higher harmonic to the output, we add a filter to cut frequencies over 3KHz. Must be a lowpass filter, with a flat response and an abrupt shape from the maximum passing frequency. Therefore we choose a filter of order five Chebyshev with 0.2 dB wave amplitude in passing band, fig. 6. The low pass filter circuit was optimized in order to have the best lowpass filter transient response.

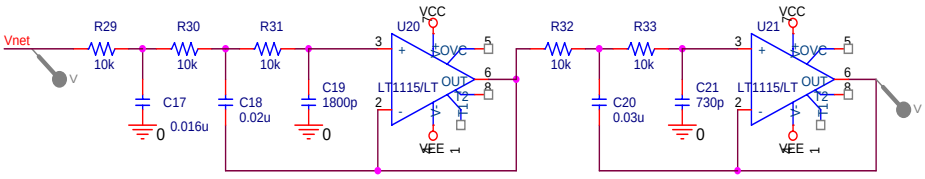

Fig. 6 The lowpass filter

Frequency response of the entire chain corresponds with the block level simulations and makes the designed behaviour. Thus the compressor frequency response is smooth over 500KHz, the driver stage of clipper emphasizes high frequencies and low-pass filter cut abruptly the frequencies over 3KHz, fig. 7.

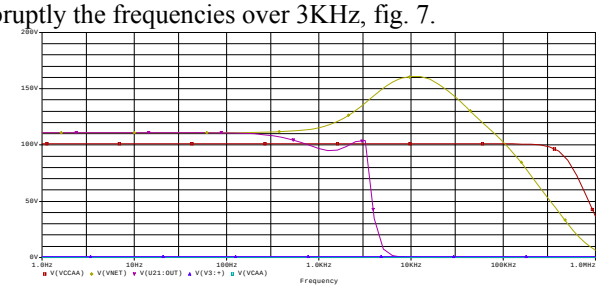

Fig. 7 Frequencies response of the whole chain of signal processing

III. THE PC INTERFACE

The electrophysiological signals acquiring begins from the source of the bioelectric signals coupled with the electrodes, amplification, processing, analog-digital conversion and data storage in some file format. For the electrophysiological studies, the data storage is necessary, for a long time, as vector data storage.

Acquisition and data storage are performed by an 8-bit microcontroller series AVR (Atmel), namely ATMega32 on a development board that has its own power source, a real

time clock circuit, an EEPROM memory, a LED display and a serial interface adapter (RS232 or RS485), fig. 8. This microcontroller has strong internal resources, allowing data acquisition and digital conversion through a 10-bit ADC, provided with eight inputs multiplexer and its own high accuracy reference voltage reference [6, 7].

Different interesting voltages are collected to internal DAC by means of microcontroller port A, ADC0 to ADC7. The conversion of analog data to a digital vector is synchronized by an internal clock which allows for choose different sampling rates. A conversion cycle starts by clearing the memory locations for the measured values. After that, every input is converted in a 10 Bits word and temporary stored into the internal RAM memory then the next input is also converted, and so on. At this moment we have an eight 10 Bytes words representing a sample of the analog entry signal. This word is now completed with the conversion time, extracted from the external "Real Time Clock" (RTC), the U10 chip.

Fig. 8 The digital recording module using the microcontroller with integrated Port-A analog-digital converter

The vector obtained looks like: 5AYYMMDDHH mmsshhV0V1.....V7, [8]. The whole record is now 24 bytes long and it is stored into the external flash memory U2. This memory has 65536 bytes allowing for over 2700 records. At a rate of 20 samples/second that means there is enough space for more of 2 minutes of records. The acquired data can be extracted by a serial link, the chip U3 providing for the RS232 specification, including hardware handshake by RTS-CTS pair. The communications parameters have been choose to meet the MODBUS specification, as is: 1 START bit, 8 data bits, 9600 Bauds, 1 Even parity bit, 1 STOP bit. During the recording process time information and recorded values are displayed cyclic.

IV. Conclusions

Usually, only non-invasive electrophysiological methods can be accepted, in respect with the tissue particularities. The paper was focused on signal processing because the electrophysiological signals have a high dynamic range and can be easily covered by the artefacts noise.

The presented vector data collection, processing and recording have the possibility to use many input channels that give the possibility to simultaneously test different versions of source-electrodes-amplifier blocks. Later this facility can be used to multipoint measuring or to increase the resolution. A specific data vector recording was presented, with the advantage of development for new remote methods in electrophysiology.

Acknowledgment

This work was supported by projects 62063, 12095 financed by Romanian National Authority for Sic. Research.

References

1. Květina, J.; Varayil, J.E.; Ali, S.M.; Kuneš, M.; Bureš, J.; Tachecí, I.; Rejchrt, S. & Kopáčová, M. (2010). Preclinical electrogastrography in experimental pigs. *International Journal of Interdiscip. Toxicol.*, Vol.3, No.2, (June 2010), pp. 53-58.
2. Al. Rusu, N. Golescu, C. Ravariu, (2008) Manufacturing and tests of mobile ECG platform, IEEE Conf. Sinaia Romania, 2008, pp 433-436
3. Bogdan, D.; Craciun, M.; Dochia, R.I.; Ionescu, M.A. & Ravariu, C. (2009). Circuit design for noise rejection in electromyography, *Proceedings of INGIMED 2009 2nd National Conference on Biomedical Engineering*, pp. 76-81, Bucharest, Romania, ICPE-CA Publisher, November 12-14, 2009
4. Merletti, R. & Parker, A.P. (2004). *Electromyography: Physiology, Engineering, And Non-invasive Applications*, IEEE Computer Society Press, New York, USA
5. B. Firtat, R. Iosub, D. Necula, F. Babarada, E. Franti, C. Moldovan, (2008) Simulation, design and microfabrication of multichannel microprobe for bioelectrical signals recording, IEEE Int. Conf., Sinaia, Romania, 2008, pp 177-180
6. F. Babarada, J. Arhip, (2009) Electrophysiology Signal Data Vector Acquiring, Congress of Romanian Medical Association, Bucharest, 2009, pp 82
7. Rustem Popa, (2006) Medical Electronics. Matrix House, Bucharest
8. ATMega32 data sheet, http://www.atmel.com/dyn/resources/prod_documents/doc2503.pdf