OBJECT ORIENTED LIBRARY FOR DYNAMIC MODELING AND SIMULATION OF SUGAR HOUSES FOR OPERATORS TRAINING.

Rogelio Mazaeda[(a)], César de Prada[(b)].

[(a)(b)]System Engineering and Automation Department, Sciences Faculty, Valladolid University.
c/ Real de Burgos s/n, CP. 47011. Valladolid, Spain.

[(a)] rogelio@cta.uva.es, [(b)] prada@autom.uva.es

ABSTRACT

A reusable object oriented dynamic model library for the simulation of the sugar crystallization process is described. The Sugar House, which is the final department of a beet sugar factory, receives a stream of concentrated sucrose syrup and delivers the commercial product in the form sugar crystals. The intended purpose of the library is the creation of a simulation tool that contributes to the training of control room operators.

Keywords: process modelling, operators training, sugar

1. INTRODUCTION.

A typical beet sugar factory has the general structure shown in figure (1). The sucrose juice is extracted from the previously sliced beets in the first section by means of a diffusion process. The obtained green juice contains most of the sucrose originally brought in with the beets but it inevitably is contaminated with many other organic and inorganic substances which are here collectively referred to as *impurities*. The presence of this non sucrose substances is highly detrimental for the process, so the purpose of the next stage of purification is precisely to increase the purity of the process stream as much as possible, by removing, at least, those substances considered more prejudicial to the quality of the final product or to the technological performance of the factory.

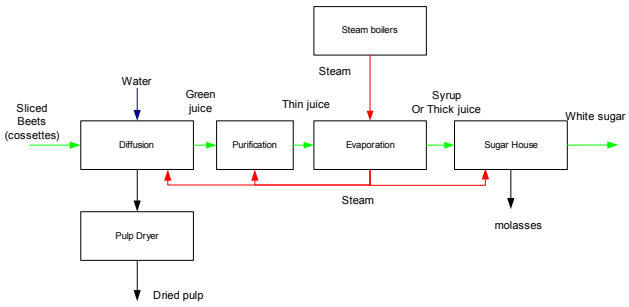

Figure 1. Beet Sugar Factory.

The output of purification, the so called thin juice is then processed in a cascade of evaporators with the purpose of removing an amount of water of about 60% of the juice original mass. The evaporators station has a very efficient design that uses steam coming from the boilers in the first step and then reutilizes the energy of the vapours released by the very water took out form the juice for heating the next steps down the cascade. This arrangement is even capable of providing steam for some other consumers in the factory.

The concentrated syrup is then fed to the Sugar House, whose duty is the making of the final marketable product by means of crystallization. Obviously, the worth of the final outcome of the factory, the white sugar, depends on the correct technological practice of the whole plant, but even a smooth supply of syrup of the right concentration and purity to the Sugar End, could result in white sugar of poor quality by an unwise operation of this last section.

In spite of a continuous automation and instrumentation investment effort on beet sugar factories, the conduction of the whole process still depends heavily on the experience and expertise of the technical personnel. This statement is even more true in the Sugar House: a section that hosts many units of the batch type performing the no so well known process of crystallization of sucrose which depends on the complex and non linear relation of many variables, some of them not directly measured in the typical industrial installation.

In this paper we present a library of components designed for the modelling of the Sugar House. The library has been developed in the modelling language of Ecosim-Pro, a state of the art object oriented simulation tool. The models have been designed with a considerable level of detail and the intended purpose of the library is to make possible the creation of a simulation application for the training of control room operators.

In the following sections of the paper a general description of sucrose crystallization and of the Sugar House process is briefly presented. It then follows a discussion of the main concepts of Object Oriented (OO) dynamic modelling to immediately explain the approach taken for the OO modelling of the Sugar End department. Finally, the use of the library is illustrated by describing with some detail one of the subsections with the presentation of some simulation results.

2. THE PROCESS OF CRYSTALLIZATION.

Crystallization (and its counterpart dissolution) are the more distinctive chemical engineering process taking part in this plant. The driving force of the process of crystallization is the existence of super saturation (***S***) of the solute in the solution i.e. the presence of a concentration of sucrose that exceeds the concentration that defines the solubility of that substance at a given temperature. So, for a pure solution of sucrose:

$$s = \frac{q_{sac/W}}{q_{sat,p}(T)} \qquad (1)$$

Crystallization may happen in a supersaturated solution (s > 1), but it is altogether impossible in under saturated ones. Even more, if crystals are placed in a solution whose super saturation is below unity, they will eventually dissolve.

The conditions of super saturation can be created either by increasing the concentration of sucrose as a result of evaporating water or by decreasing the temperature (see figure 2).

The supersaturated region can be considered as divided in two zones by a more or less fuzzy frontier: there is a metaestable zone where existing sugar crystal can grow up but where the rate of spontaneous nucleation is negligible and the labile zone, in which the probability of nucleation, that is the creation of stable crystal nuclei out of no particulate matter, increases radically.

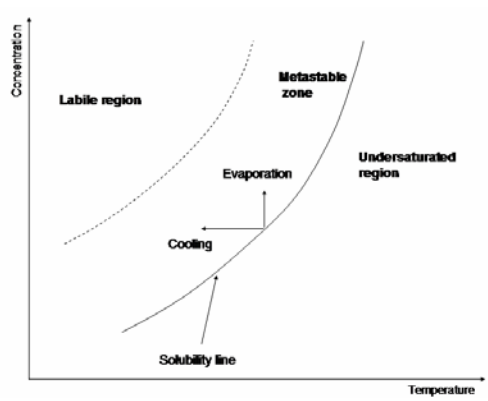

Figure 2. Solubility Curve.

The presence of impurities in the technical solution, raises the solubility of sucrose by a factor y_{sat}. This factor depends no only on the concentration of impurities but also on the internal composition of the different non sucrose substances grouped under this label.

$$s = \frac{q_{sac/W}}{q_{sat,p}(T) \cdot y_{sat}} \qquad (2)$$

The fact that the solubility of sucrose increases with the concentration of impurities means that the crystallization process is impaired by their presence. So the purity of the syrups (as defined in 3) is an indicator that must not be neglected.

$$Pur = \frac{m_{suc}}{m_{suc} + m_{imp}} \cdot 100 \qquad (3)$$

The existence of super saturation is a precondition for the growing of crystals. It is also, the single more important factor in determining the kinetics of the process, but is not the only one. Crystallization is a very complex phenomenon not completely understood (Mullin 2001), it is thought however that it may be explained as the series connection of two concurrent mechanisms: one of mass diffusion from the solution to the crystal surface through a thin stagnant layer, a one of reaction in the surface that models the incorporation of the growing unit to the crystal lattice. The overall rate of the crystal growing process is then mainly determined by the slower of the two mechanisms. The surface reaction step is dependent on temperature and for the case of sucrose this dependence is such that at relatively high temperatures of about 70-80 ºC, the mass diffusion step is the rate limiting one whereas at lower temperatures values the situation is reversed.

So it can be stated that the overall rate of mass transfer from the solution to the crystals depends on many factors: concentration of the sucrose, purity which determines the solubility but also in the sense that some non sucrose substances interferes directly with the incorporation of sucrose molecules to the lattice, temperature through its influence on solubility but also on the surface reaction step, the viscosity and degree of stirring of the mixture via their impact on the mass transfer step.

$$R_g = f(s, Pur, T, \eta, P_{mot}) \qquad (4)$$

The preferred mathematical framework for modeling the kind of particulate systems represented by crystallization process is the one provided by population balance equations (PBE). In this setup, the time evolution of the distribution of some relevant property of the grains, for example a characteristic length (***l***), is tracked by a partial differential equation. For the case of an homogeneous system, a very general PBE could be stated as in (5).

$$\frac{dn(l,t)}{dt} = \frac{\partial[Gn(l,t)]}{\partial l} + n_{in} + B_{nuc} \qquad (5)$$

Where ***n(l,t)*** represents the time dependent density function describing the amount of particles for unit volume that can be found with some specific characteristic length at any given time.

In (5) $\boldsymbol{G}$ represents the growth velocity of the linear dimension, $\boldsymbol{B_{nu}}_c$ the rate of appearance of new particles by nucleation and n_{in} which could be of any sign, the net rate of introduction (or disappearance) of particles in the system due to movement through the boundaries or to breakage or agglomeration of previously existing ones.

The general PBE can be solved numerically to give the shape of the distribution of sizes (the crystal size distribution or CSD as known in crystallization) as the systems evolves. In many applications, however, all that is needed is the knowledge of some of its moments defined as:

$$\mu_k = \int_0^\infty l^k n(l,t) dl \qquad (6)$$

The application of the moments transformation to each term of (5) converts de original PDE in a set of ordinary differential equations (ODE) more easily solvable by standard numerical methods.

The first moments have a definite physical interpretation. So for example μ0 represents the total number of particles, while μ_1, μ_2, μ_3 corresponds to the aggregate value of the length, the surface area and the volume of the grains respectively. From the moments it also easy to obtain other important summary information as the mass average size (L_{ave}) and the normalized standard deviation or coefficient of variation (CV) that gives an indication of the spread of sizes of the CSD.

The complete description of the crystallization systems, must include the relation between the PBE and the continuous part represented by the mass and energy balances. This link must contemplate that the total mass of sucrose that leaves the liquid phase to be deposited over the surface of the growing crystals depends on the conditions of the continuous system and on the total surface of those crystals:

$$W_{cris} = R_g \cdot A_{cris} \qquad (7)$$

But the total area of crystallized sugar, can be obtained directly of the second moment of the CSD.

$$A_{cris} = k_a \mu_2 V \qquad (8)$$

Where $\boldsymbol{k_a}$ is surface factor of the sugar grains that relates the area to the square of the characteristic dimension.

The linear growing rate is, obviously, related to the mass transfer rate which is the ultimate reason of that very increase in the size of crystals:

$$G_c = \frac{k_a \cdot R_g}{3 \cdot k_v \cdot \rho_{cris}} \qquad (9)$$

In (11) $\boldsymbol{\rho_{cris}}$ is the density of the crystals, while $\boldsymbol{kv}$ is again a shape factor, in this case relating the cube of the linear dimension with the volume of the sugar grain.

3. SUGAR HOUSE DESCRIPTION.

The Sugar House (Van der Poel, Schiweck and Schwartz 1998) receives a concentrated sucrose syrup which has been extracted from beets, and conveniently treated in the previous sections of the sugar factory and delivers the white crystallized commercial sugar.

The growing of the sugar grains is carried out in different types of crystallizers: those where super saturation, the driving force for crystallization, is created by evaporation of water: like the batch operated *tachas* or the continuous crystallizers, or those where it is generated by the controlled reduction of the temperature: cooling crystallizers.

The white sugar must comply with strict quality requirements concerning its purity and the parameters describing the CSD: the population must have the right mean size and ought to be not too spread. The need to meet these quality indicators determines the utilization of batch type crystallizers for growing the commercial grain, because with this type of equipment is possible to exercise a greater degree of control over the process. This is so because in the batch *tachas* it is possible, to avoid a too wide dispersion of sizes by initially seeding the crystallizer with a careful prepared mass of tiny crystals with a narrow CSD. This population is then made to grow along the batch by keeping the super saturation in the safe metastable zone with the purpose of avoiding the creation of new crystals by spontaneous nucleation (Mazaeda and Prada 2007). So, in theory, if the process is correctly conducted, an the end of the strike the same number of originally seeded grains would be obtained with the same standard deviation in its CSD but with a much higher mean size. Of course, the final actual CSD would be wider, because of the inevitable differences in growing speed provoked, for example, by local super saturation fluctuations. In any case, the CSD currently attainable by the much simpler continuous crystallizers, is worse due to intrinsic dispersion of residence times of that mode of operation.

The array of *tachas* delivers a slurry, the so called massecuite, where the sugar crystals are embedded in the original syrup, now called mother liquor. In order to obtain the final product, the sugar grains need to be separated from the surrounding syrup, and this task is performed in an arrangement of centrifuges. The centrifuges, in this case, are also of the batch type, and for a similar motivation of quality. The syrup obtained just after loading the rotating basket with the slurry, is essentially the separated mother liquor. But it is impossible to completely eliminate the syrup from the crystals by using only the mechanical separation power. So to comply with the purity standards of the final product, at some point in the

centrifuge cycle, it is imperative to inject clear water in the basket to extract, by diffusion, and push out of the crystal bed the traces of mother liquor adhered to the surface of the grains. The water extracts the remaining liquor but also dissolves part of the solid sugar, so the expelled liquid has now a greater level of purity. Hence, the syrup from the centrifuges is divided in two streams of different purities: poor syrup first and then rich syrup. The wet sugar crystals are finally discharged to be transported to a dryer for removing water and then to the appropriate silos and out to market.

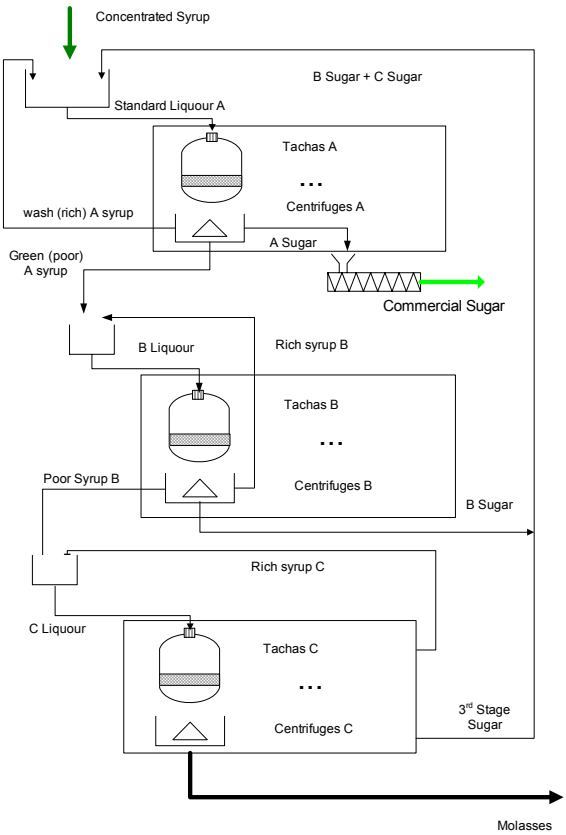

Figure 3. Sugar House Layout.

In relation to the syrup streams, it is economically justified to recover the extra dissolved sucrose by recycling the rich one back to be fed to the crystallizer mixed with incoming concentrated juice. The poor syrup, on the other hand, which contains almost all the impurities put in the department, if recycled would compromise the process by lowering the purity of the standard liquor, without bringing in any benefits. But, it can't just be throw away either, because it still contains too much dissolved sucrose: the strategy adopted in most sugar houses is to continue the processing of poor syrups in subsequent stages of similar structure to the one just described.

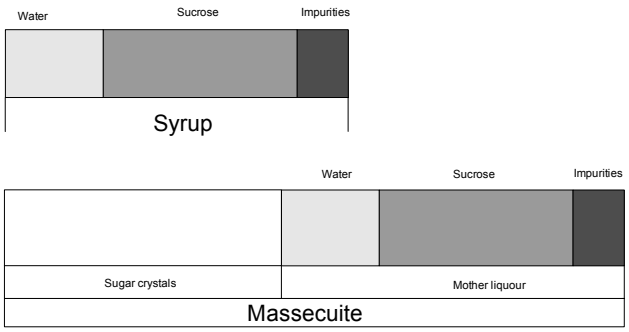

Figure 4. Syrup and Massecuite Composition.

Most modern Sugar Houses employ two more stages: know as B and C stages. The functioning is very similar to the already explained first product white sugar or A stage. But the objective now of crystallization is the separation of as much sugar as possible in order to recover it for the formation of first product. These two extra exhausting passes don't have an immediate concern on the quality of the their produced sugar as a market product, so the requirements of a narrow CSD is somehow relaxed but not too much: a sugar with mixed grain or with a large amount of fines complicates the process of separation in the centrifuges.

The B and C stages have to the deal with the problem of the increasing viscosity of the process streams. The syrups have now a low (and decreasing) purity, and this fact implies a higher level of concentration to achieve the needed super saturation: thus the increased consistency of the mass. This fact makes that the moving around of syrups becomes a significant problem which affects the selection of the processing units: nonetheless in the B stage it is still possible to use batch *tachas* for crystallization but the centrifuges must be of the continuous type. In the C stage, almost all crystallization equipment is of the continuous kind: at first evaporative crystallizers are used but the final exhaustion of masses is carried out in a cascade of cooling crystallizers.

On the other hand, the speed of crystallization is reduced considerably: so that if a strike of first product takes around two hours, the residence time of the crystallization towers installation at the C stage is in the order of the 45 hours.

The poor syrup of the third product, known as molasses, with a purity of around 60%, contain almost all the original impurities but also that part of sucrose that cannot be efficiently recovered with the standard industrial equipment. Molasses are thus a final byproduct of the Sugar End that can be used for the production of alcohol.

4. OBJECT ORIENTED DYNAMIC MODELLING SUGAR HOUSE LIBRARY.

The Object Oriented (OO) paradigm, originally introduced in the context of general purpose software design, had been extended to the modelling of dynamic systems.

The object orientation, in this context, provides the modellers with the language constructs that let them manage complexity by allowing the creation of reusable components. This approach allows what is called *physical modelling*, because it encourages the creation of large models by interconnecting the different pieces just in the same manner in which a physical world prototype would be constructed. The models so designed could in its turn be made available as components to a higher level of abstraction, making possible in this way the successful hierarchical decomposition of otherwise very difficult problems.

The object concept implies encapsulation which means that the internal structure and behaviour is hidden from the rest of the model. The interaction between components is carried out through the so called *ports*, which are special objects, also defined by the modeller, used to specify the variables to be interchanged and the mathematical behaviour of those variables at the junction.

For the object approach to work, the differential- algebraic (DAE) mathematical equations that describe them, must be stated in an non causal, declarative way (Cellier and Kofman 2006). Once the final, aggregated model is defined, the computational causality can be established, the boundary variables are identified and the model is ready to be exercised by performing experiments on it.

The advantages of OO modelling have been put to use in the creation of the Sugar House library.

The library is a collection of class models representing the main processing units already mentioned. All the classes are comprehensively parameterized and coded in a general way so that when used several times to create an specific flowsheet configuration, each instantiated object can receive its detailed set of parameters exactly defining its physical and operational characteristics.

The main components of the library are:

- **Batch evaporative crystallizer (*tacha*)**: a complex class which codifies a model of a discrete-continuous hybrid nature. The continuous dynamical model expresses the material, energy and population balances describing the physics of the particulate system. The crystallizer is represented by a closed container where the massecuite is processed and where super saturation is created by means of the evaporation of water in vacuum conditions and the controlled feeding of syrup. The evaporation process is conducted at low pressures in order to be able to work at correspondingly low temperatures to avoid the caramelization or thermal degradation of sucrose. The heat needed to sustain the evaporation of water is provided by a tube and shell heat exchanger or calandria located in the lower half of unit: the mass inside the crystallizer moves inside the tubes and the heat is transferred by virtue of the condensing steam in the shell. The mass inside is vigorously stirred by a mechanical agitator guaranteeing its homogeneity. The stirrer has also an important role in increasing the kinetics of crystallization and on enhancing the coefficient of heat transmission between the mass and the calandria. The model also incorporates the program of the crystallizer implemented by a complex fully parameterized state machine that drives the stage by stage evolution of the strike. The typical stage sequencing includes: the initial loading with feeding syrup, a concentration by evaporation phase after establishing a vacuum pressure in the vapor phase space on top of the liquid, the introduction of the crystal seed, the growing of the sugar crystals, the final conditioning of the consistency of the slurry, the discharge of the massecuite, and finally a cleaning stage with steam to remove any traces of products and to prepare the unit for the next strike. The class representing the *tacha* can be instantiated as many times as needed, and each particular object can have its own defining parameters. The behavior of the object depends of the characteristics of the incoming syrup: so each one will reproduce the very different performances of the real units when connected in the different stages (A, B or C) of the plant.
- **Batch centrifuge**: It is also an hybrid model which describes the separation of the mother liquor from the sugar crystals provoked by the centrifugal force produced in a perforated rotating basket. A program guides the operation of the equipment in each step of the cycle which includes: the loading of massecuite with the simultaneous initial separation of mother liquor, acceleration of the basket and injection of clear water for removal of syrup traces, the slowing down of the drum and the final discharge of sugar crystals. The component describes the processes of filtration of the mother liquor and water through the developing sugar bed. The dissolution of sugar crystals is also modelled when super saturation falls below unity during water washing. The dynamics of bed formation is reflected and the dependence of bed filterability on the characteristics of the CSD of sugar is accounted for. The configuring parameters of the class include: geometrical dimensions of the basket and its angular speed profile. The timing of the different stages of centrifuge program can be freely specified. It is specially important the opportunity of establishing the poor to rich syrup switching time: a key parameter used by the technical personnel to achieve an efficient operation of department.
- **Continuous centrifuges**: It also separates the sugar crystals from the mother liquor. The process in this case is continuous and this fact makes possible the handling of more viscous masses but, on the down-

side, it cannot achieve the same degree of purity of the extracted crystals. This characteristics make this kind of centrifuges the right choice for B and C stages. This unit can be provided in two version: with and without separation of low and high purity syrups.

- **Continuous evaporative crystallizer**: The massecuite travels from input to output through a series of compartments. The super saturation is maintained in the metastable zone inside each cubicle by balancing the amount of water evaporated at vacuum conditions with the introduction of the right amount of syrup. The heat needed for evaporation is provided by means of the condensation of steam flowing inside a bundle of tubes arranged in the longitudinal direction of the equipment.
- **Cooling crystallization tower**: It is essentially a heat exchanger where the now very viscous slurry is made to circulate around an array of tubes conveying cold water in a counter current way. The super saturation is increased by virtue of its dependence on temperature. The main technological difficulty with this kind of equipment is the very high viscosity of the magma, and this problem is made even worse by the reduction of temperature. So, a cooling tower can be configured in such a way as to be able to provide for the heating of the massecuite in its final stretch by allowing the circulation of hot water in a separated circuit. Care must be exercised, however, to achieve the desired reduction of viscosity avoiding the dissolution of crystals by heating just to the saturation point but not lower.

In both type of continuous crystallizers is important to represent correctly the retention time of the real equipment because of its relation with the width of the resulting CSD. This is accomplished by the series connection of number of sections modelled as ideally mixed stirred tanks.

In all the mentioned units models the dynamics of crystal growth is represented by the evolution of the moments of number density function. The use of the moments transformation as a model reduction technique is imperative to alleviate the numerical load because the intended purpose of the model library is the creation of large simulated flowsheet for the entire department.

It has been considered relevant to model up to six moments of the PBE given the existence of expressions that describe the rate of some phenomena, for example nucleation, as depending on μ_5.

The above described main units of the house, can be instantiated several times, in each case specifying a different set of configuring parameters, to describe the precise disposition of the concrete plant. But in any complex process industry there is a collection of other indispensable standard auxiliary equipment like, for example, buffer tanks, heat exchangers, pumps, valves and even controlling devices like PIDs. Configurable classes representing the mentioned standard apparatus have been developed as part of a common library designed to assist in the modelling of the complete sugar factory (Merino, Mazaeda, Alves, Acebes and Prada 2006]. However, this standard equipment is not only helpful in describing the auxiliary elements surrounding the main units, but it is also used as building blocks for the internal description of those very major units. In this way, taking advantage of the hierarchical composition power of object orientation, a complex component, like the one representing the *tachas*, is made up of an assortment of lower level components like valves and PIDs.

The connection of the different models requires also the premeditated design of the appropriate *ports*. Some of these are provided as part of the already mentioned common library, as for example, the one representing the flow of saturated or super heated steam. Others are defined as part of Sugar House Library like those describing massecuite and syrups.

In all cases, the ports should introduce the needed equations to explain the behaviour of typical process variables like pressure and total mass flow. To describe the conduction of pressure for example, which is a variable of type *across* (in bond graph terminology), the port coding must indicate the need to add an extra restriction equation for each junction specifying the equality of the corresponding variables in all the converging branches. On the other hand, variables of the *through* kind, like mass flow, calls for the introduction of an equation stating that the sum of the flows at the node must be cero. The inclusion of the mentioned restriction equations for each node in the final model can be as simple as using the appropriate modelling language constructs, see for example figure (5) and eq. (10).

```
PORT syrup
     EQUAL  REAL P
     SUM    REAL W

     EQUAL OUT REAL h
     SUM   IN  REAL H
     …
CONTINUOUS
     H=w*h
END PORT
```

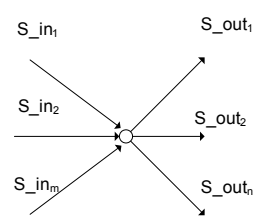

Figure 5. Syrup Port Definition Fragment.

$$S_1.P = S_2.P = \cdots S_n.P$$
$$\sum_{i=1}^{n} S_i.W = 0 \qquad (10)$$

There are, on the other hand, magnitudes which have a mixed kind of behaviour: the value of the variable

of the branches into the node must be summed up, but it must be considered as equal in every departing conduit. This can be observed in transport variables concerning for example the transmission of heat by convection in the direction of the flow: the total enthalpy in the node is the sum of the contribution of all incoming flows, but the specific enthalpy of all the departing nodes is the same:

$$
\begin{aligned}
&H = \sum_{i=1}^{m} S_in_i.H \\
&S_out_1.h = \cdots = S_out_n.h = h \qquad (11)\\
&H = W \cdot h
\end{aligned}
$$

In the case of the port defined for the transport of the massecuite streams, there is the additional need of conveying information relative to the shape of the CSD. For the reason already discussed, it has been decided to pass on the values of the first six moments of the distribution.

Each one of the moments must be considered as a transport variable so each one receives a similar mathematical treatment. For example in figure (6) and equations (12) the procedure is exemplified for the case of the cero moment. The total flow of the incoming quantity (in this cases total number of particles per unit time) are added, while the specific value of all the outgoing branches, in this case the number of particles per unit time per unit volume, is forced to be the same. In (12) Q_{mm} stands for the total volumetric flow rate of the mother liquor of the slurry streams arriving at the node.

```
PORT massecuite
     EQUAL OUT REAL fm0
     SUM   IN  REAL Fm0
     …
CONTINUOUS
     Fm0=Qmm*fm0
END PORT
```

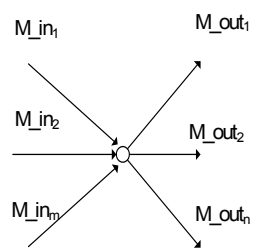

Figure 6. Massecuite Port Definition Fragment. CSD Moments Transport.

$$
\begin{aligned}
&Fm_0 = \sum_{i=1}^{m} M_in_i.Fm_0 \\
&M_out_1.f\mu_0 = \cdots = M_out_n.f\mu_0 = f\mu_0 \qquad (12)\\
&f\mu_0 = {Fm_0}/{Q_{mm}}
\end{aligned}
$$

Each one of the components integrated in the sugar house library has their own set of modelling assumptions in tune with the declared operators training purpose of the whole project. The targeted scale of the kind of application tool to be build based on the library, aiming at describing the entire Sugar House plant as part of a scheme including a complete Sugar factory, also determined the degree of resolution attainable when dealing with each individual detail. The rationale followed has been the being able to offer to the would-be trainee a model that represents correctly the main known relations between the many variables involved by scrupulously stating the pertinent balance equations and by reflecting accurately the known structure of each of the units. The exact representation of the external configuration of the specific sugar house flowsheet depends of each particular example but in any case is made possible by the very object oriented nature of the library. Additionally, the reproduction of the programs of the batch units like the *tachas* and first product centrifuges has been very realistic and detailed.

A more difficult issue is the truthful accounting of the rate processes like for example, the kinetics of crystallization and dissolution or the heat transfer coefficients. Here the challenge is not only the accurate reproduction of the observed dynamic behaviour but to make that behaviour a meaningful function of the relevant prevailing parameters and properties of the concerned streams. So for example, it is known that the heat transfer coefficient is not more than a convenient simplification of a more complex physical phenomenon, and for this reason cannot be simply approximated by a fixed number suitable for every situation. The accepted practice in the chemical engineering community is the approximation of this kind of rate coefficients by experimental correlations between the appropriate non dimensional numbers adapted to the specific situation. For example, the heat transfer coefficient can be typically obtained as function of the Reynolds, Prandtl and Nusselt numbers and this gives the chance of putting the referred parameter in relation with the prevailing conditions of the flow, the thermal properties of the fluid, and geometry of the problem. Similar relations do exist to obtain the mass transfer coefficient which is important in describing the velocity of crystallization and dissolution. The approach here taken is to make use of the existing experimental or heuristic relations for describing the mentioned dynamics in the major units, especially those of batch kind where the conditions are widely modified along the strike. In any case, there is always room for adapting free parameters of the models to match the available measured variables values obtained from the specific real plant.

Another important concern relates to the modelling of the mixing behaviour of the different types of equipment. For batch units it is somehow sustainable the claim of a perfectly mixed tank which translates into a simple, global parameter ordinary differential equations model. A Continuous crystallizer, on the other hand, exhibits a more complex residence time distribution (RTD) function, halfway between the two ideals patterns of perfectly mixed reactor and plug flow reactor. Since the expected characteristics of the final CSD, in particular its width, depends critically on the residence time of the sugar crys-

tals in the reactor, it is important to get right this behaviour. The approach here followed has been to approximate the RTD by placing a cascade of an enough number of perfectly mixed reactor models.

To model auxiliary equipment like heat exchangers correctly, it would be necessary to follow a similar discretization strategy. Although perfectly possible, the approach here suggested is to pragmatically solve the trade off between dynamic accuracy and easiness of the numerical solution in favour of the latter.

Other general important modelling assumptions of the library have already been mentioned in passing, but we explain them here giving more details for the sake of precision: all the non sugars present in the technical streams are grouped under the impurity tag. The exact composition of the impurities is of course important, but it would be extremely difficult to keep track of all these substances individually. In any case, by considering all non sugars together, we here follow the common practice of most sugar industry studies. In those cases in which the exact nature of non sugar substances has a big impact, like for example when describing their influence on solubility, the unpredictability caused by the ignorance of the exact impurities composition is accounted for by means of suitable adjustable parameters. Furthermore, the library do not contemplate either the possibility of mass transfer between the impurities and any of the other species integrating the syrups or the massecuite. This, for example, rule out the considering of the process of inversion, not excessively important in the sugar house anyway, whereby the sucrose molecules are transformed in inverted sugars which are termed as impurities. The process of impurities inclusion in the sugar crystals is not modelled either: this phenomenon can be observed when the crystals grow up too rapidly and traces of mother liquor gets trapped inside the lattice.

Finally it should be said that the library must use the relevant properties of the described streams like specific enthalpies, densities, viscosities and the like. The properties of steam are widely known but those specifically pertaining to the sugar industry have been taken from the excellent compilation due to Bubnik, Kadlec, Urban y Bruhns (1995).

5. THE MODEL OF THE SUBSECTION OF STANDARD LIQUOR FORMATION.

In order to better illustrate the concepts involved in the design and use of the library, the subsection in charge of the formation of standard liquor for the A stage is described. This part of the Sugar House (fig. 7), whose purpose is to provide the feeding liquor to the first stage crystallizers, consist of a series of continuously operated stirred tanks which are fed with the concentrated syrup entering the department and with the rich syrups from the A centrifuges. The tanks also receive the sugars from the B and C stages, and the goal is to completely dissolve all the incoming crystals. The temperature of the equipment is kept in a safe high value to help the dissolution process by increasing the solubility of the solution. The concentration of the resulting liquor is automatically controlled by manipulating the input of a more diluted juice.

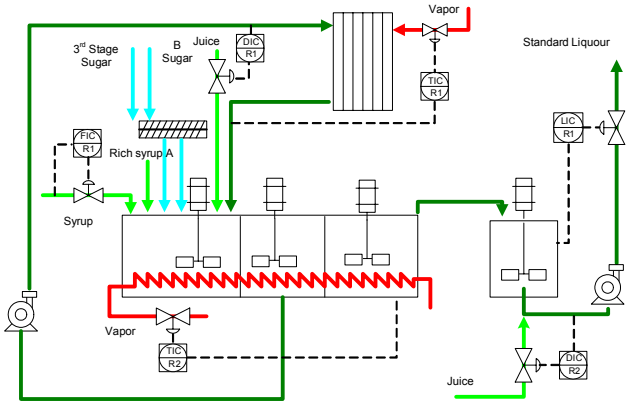

Figure 7. Standard Liquor Formation.

In figure 8 an EcosimPro (EcoDiagram) connection diagram model describing the central, most important part of the subsection is shown. The aggregated model incorporates readily a few instances of model classes representing standard equipment such as valves, pumps, heat exchangers and PID controllers. A side by side inspection of the section flowsheet representation (fig.7) and its model assembled graphically by reusable object models (fig. 8) gives an idea of how intuitive the OO way of modeling could be.

The class ***compartment*** has been specifically developed for this section. It represents a perfectly mixed control volume that is able to receive the two mentioned types of streams: syrup and massecuite, and which delivers, generally by overflowing, the resulting slurry. The main process being described in the component is the dissolution of the existing sugar crystals.

The other especial class used in the final model is the one representing a steam coil used for the heating of the mass inside each of the cubicles.

The original processing tank is build using an elongated horizontal open reservoir, internally divided in three compartments by partition walls. In the model this fact is represented by placing the same number of instances of the class ***compartment*** (*comp1* to *comp3*) in series. In this example, it has been assumed that each of the original compartments behaves as a perfectly mixed reactor. Even though each real partition has its own dedicated stirrer, the previous claim might no be entirely justified. In any case, if RTD data were available, it would be straightforward to approximate the corresponding mixing behavior, by placing the appropriate number of ***compartment*** objects in cascade.

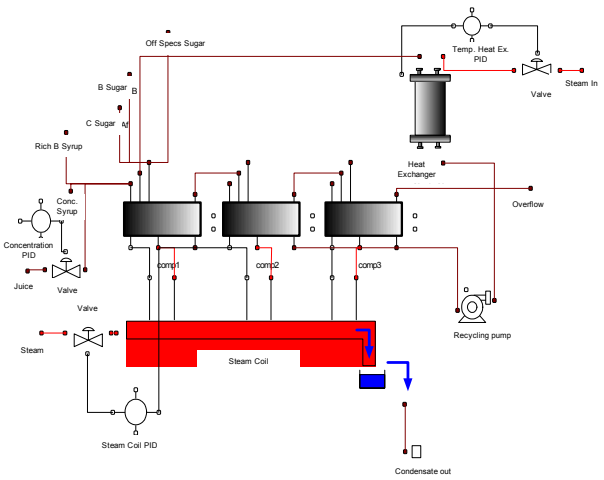

Figure 8. EcosimPro Internal Description of the Horizontal Dissolution Tank.

The mathematical model of each compartment keeps track of the presence of each of the constituents of the slurry by stating the corresponding mass balances.

The most important element to consider here is the rate at which mass is transferred from the dissolving crystals to the solution. This rate in [kg/s] can be determined according to:

$$W_{dis} = k_d A_{cris} C_{sug} (s-1) \qquad (13)$$

Dissolution can be considered as the counterpart of crystallization, but in this case, the phenomenon can be successfully described by just one mechanism: mass diffusion from the crystals to the bulk of the solution: so k_d is the mass transfer coefficient [m/s], C_{sug} the concentration of sucrose in a saturated technical solution [kg/m^3], A_{cris} the total area [m^2] of existing crystals obtained from PBE and S the supersaturation which should be less that unity for dissolution to occur.

The mass transfer coefficient can be adjusted in accordance to the measurements, or, in the absence of observed data it could be approximated by correlations between non dimensional numbers as, for example, in Koiranen, Kilpio, Nurmi and Norden (1999).

The energy balance is also written down in the model to correctly describe the influence of temperature on the workings of the installation. Figure 9 illustrates the behavior of the compartments in cascade in relation to the temperature of the mass. The graph depicts the evolution of the sugar mass fraction along with the value of supersaturation, which is the driving force of the dissolution process and whose dependence on temperature is the ultimate cause of the above mentioned correlation. It can be observed, that for a temperature of 65ºC, the sugar content decreases form a compartment to the next, but the equipment is unable to dissolve all the incoming grains. When the temperature of the mass is increased by modifying the set point that controls the steam input to the heating coil, initially to 80 ºC and then to the normal working value of 90ºC, the super saturation is correspondingly lowered and the sugar content goes to zero first in the last cubicle and then, in the intermediate one also. A high temperature helps the dissolution process, but values above 90ºC should be avoided to prevent *caramelization*.

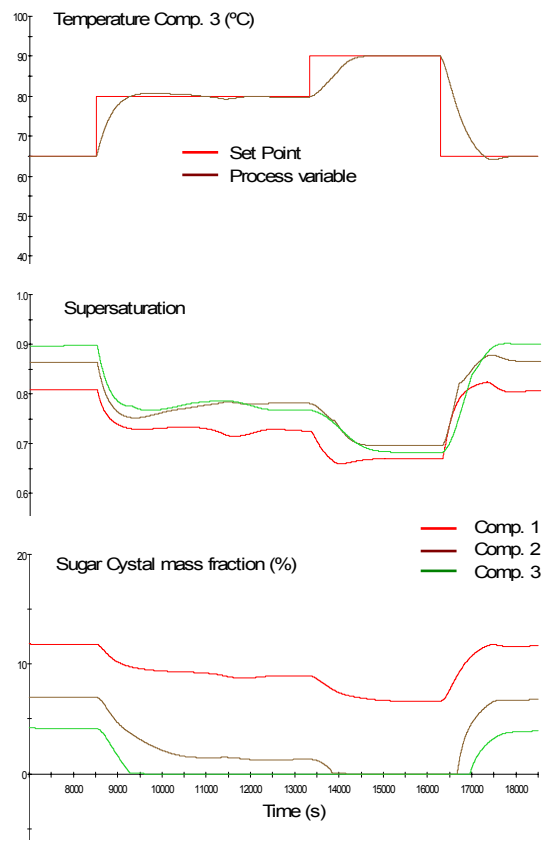

Figure 9. Influence of Temperature on Dissolution.

There are many other factors determining the performance of the subsection: figure 10, for example illustrates the impact on the performance of the equipment of the amount of sugar crystals originally fed to the first compartment.

The control room operator should be trained in the not so obvious relationships of the different variables to be able to take the appropriate actions when confronted with the real factory challenges. It may very well happen, for example, that the quality of the available steam is incapable of guaranteeing the recommend mass temperature, she might then try to compensate this effect by a suitable manipulation of the proportion between the different streams put in.

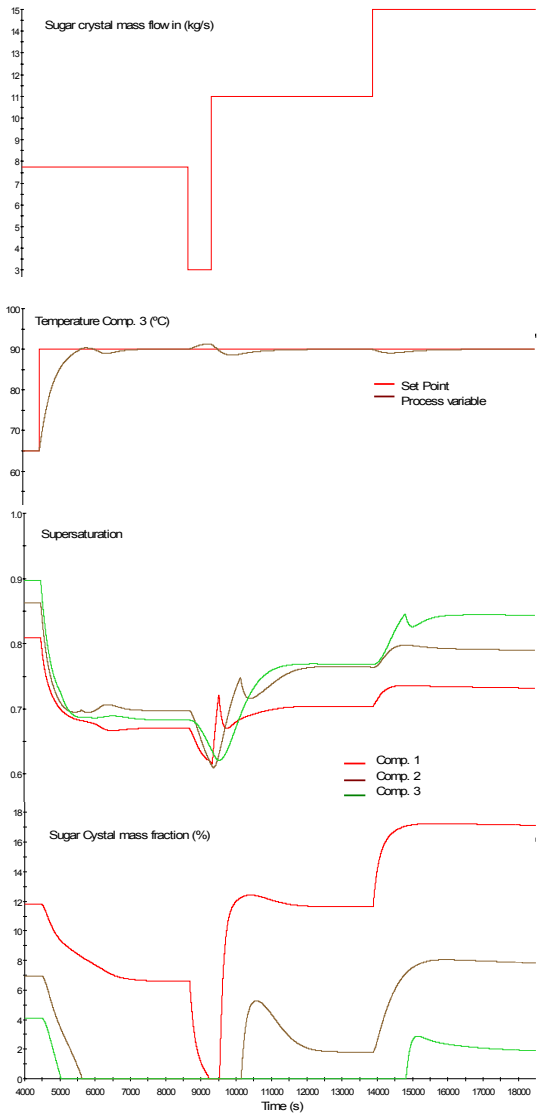

Figure 10. Sugar Crystals Mass Fraction in each Compartment with Different Mass Flows of B Sugar.

Other elements should be of concern in the conduction of the subsection. It is important, for instance, the guaranteeing of a constant purity in the liquor sent to the downstream *tachas*. So if the purity of the arriving concentrated syrup changes, the operator should counterbalance this fact by adjusting the amount of rich syrup introduced in the dissolution tank.

Finally, it should be said, that for a useful training experience, the developed dynamical models should be presented to the trainee with an HMI interface (fig. 11) that resembles the one he would meet in the real factory. The training application (Alves, Normey-Rico, Merino, Acebes and Prada 2005) also guarantees the real time execution of the simulated sections.

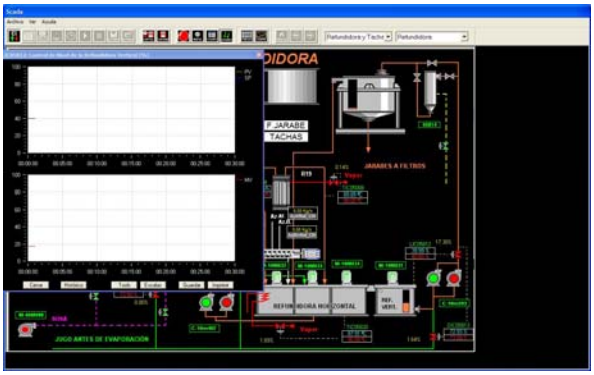

Figure 11 HMI Interface of the Training Tool.

ACKNOWLEDGMENTS

The authors would like to express their gratitude to Azucarera Ebro S.L. (Spain) for their financial support and technical assistance throughout the development of the Sugar Factory Dynamic Simulator and to the Ministry of Science and Education of Spain for their financial support through the project PTR1995-0820-OP.

REFERENCES

Alves, R., Normey-Rico, J.E., Merino, A., Acebes, L.F., Prada, C. de, 2005. OPC based distributed real time simulation of complex continuous processes. *Simulation Modelling Practice and Theory*. (13)7, 525-549.

Bubnik, Z., Kadlec, P., Urban, D., Bruhns, M., 1995. *Sugar Technologist Manual. Chemical and Physical Data Manufacturers and Users*. Germany: Verlag Dr. Albert Bartens.

Cellier, F.E., Kofman, E., 2006. *Continuous Systems Simulation*, New York: Springer-Verlag.

Koiranen, T., Kilpio, T., Nurmi, J., Norden, H.V., 1999. The modeling and simulation of dissolution of sucrose crystals. *Journal of Crystal Growth*. (198/199), 749 - 753.

Mazaeda, R., Prada, C. de, 2007. Dynamic Simulation of a Sucrose Batch Evaporative Crystallizer for Operators Training, *Proceedings of the 19th European Modeling and Simulation Symposium (Simulation in Industry), EMSS 2007*, Bergeggi, Italia.

Merino, A., Mazaeda, R., Alves, R., Acebes, L.F., Prada C. de, 2006. Sugar factory simulator for operators training. *Proceedings of the 7th IFAC Symposium in Advances in Control Education: ACE 2006*, Madrid, Spain.

Mullin, J.W., 2001. *Crystallization*. 4th Edition London: Butterwoth-Heinemann.

Van der Poel, P.W., Schiweck, H., Schwartz, T., 1998. *Sugar Technology. Beet and Cane Sugar Manufacture*. Germany: Verlag Dr. Albert Bartens.